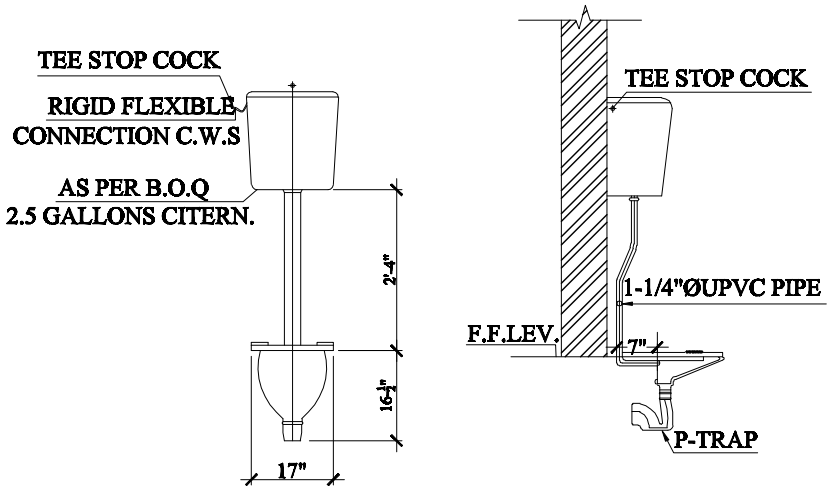

INSTALLATION DETAIL OF EASTERN CLOSET DETAIL
NOT TO SCALE

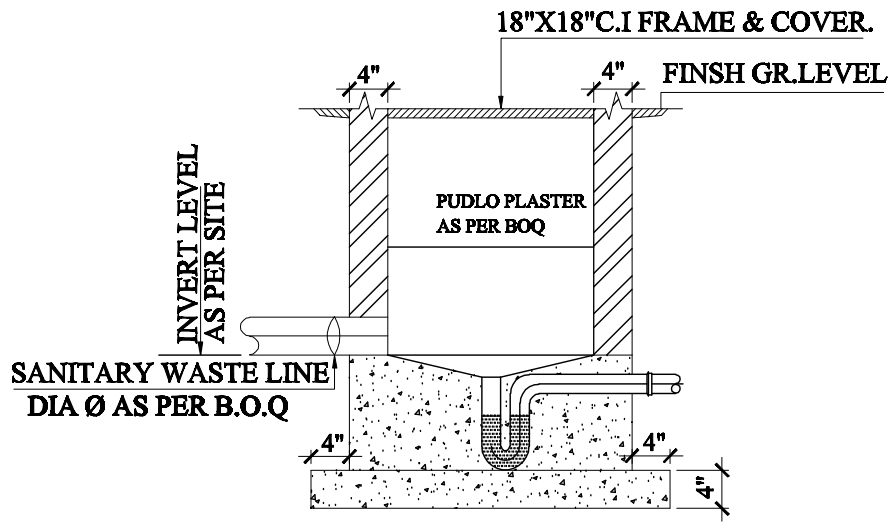

SECTION-B-B

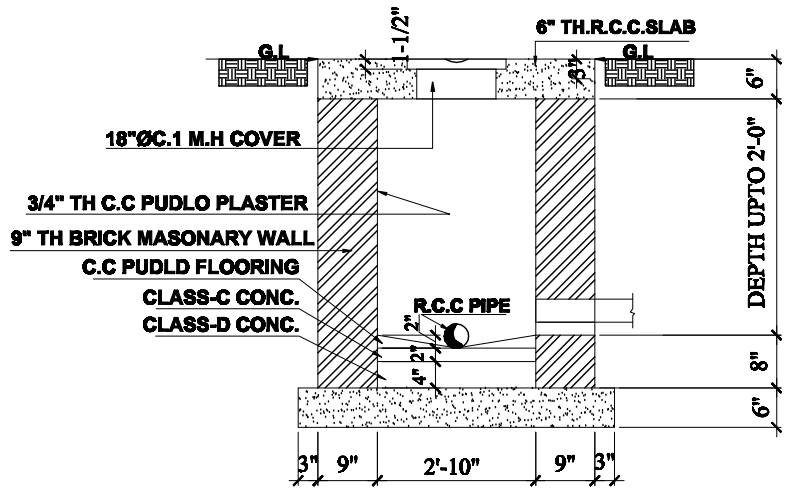

MANHOLE
TYP-A

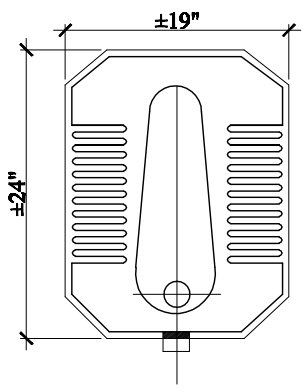

STANDARD W/C

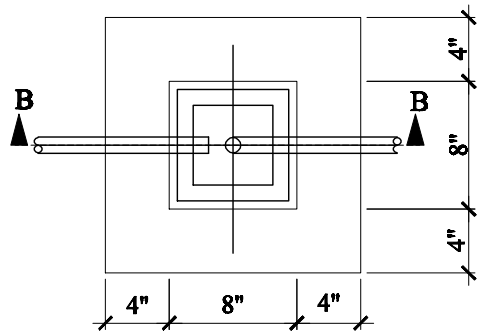

PLAN

GULLY TRAP DETAIL
NOT TO SCALE

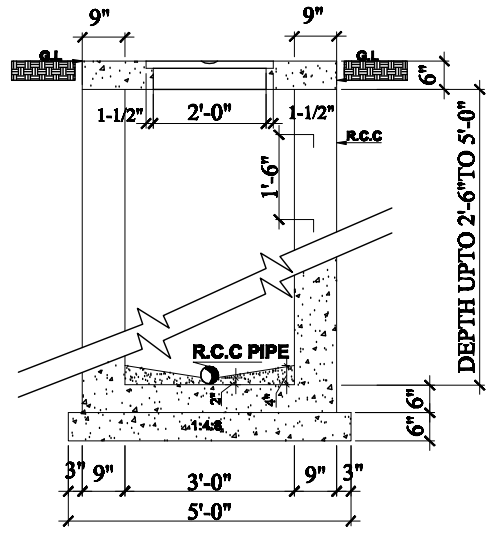

MANHOLE
TYP-B

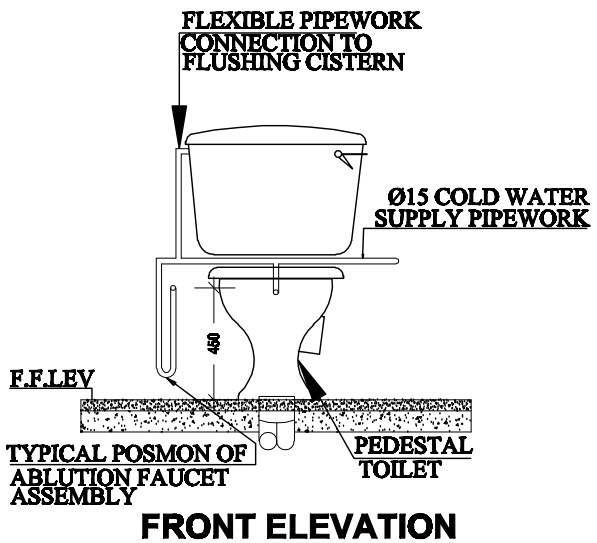

FRONT ELEVATION

WESTERN WATER CLOSET DETAIL
NOT TO SCALE

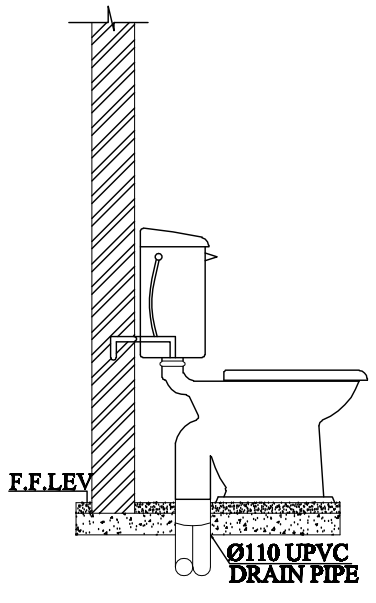

SIDE ELEVATION

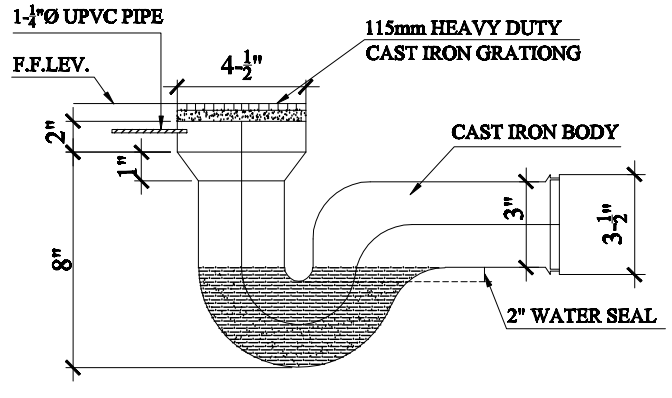

FLOOR DRAIN DETAIL
NOT TO SCALE

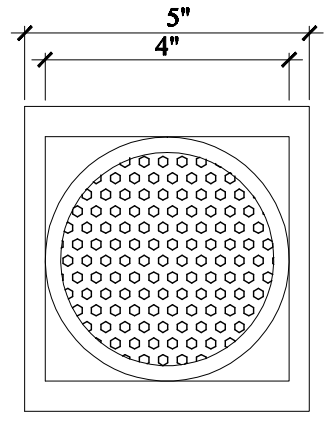

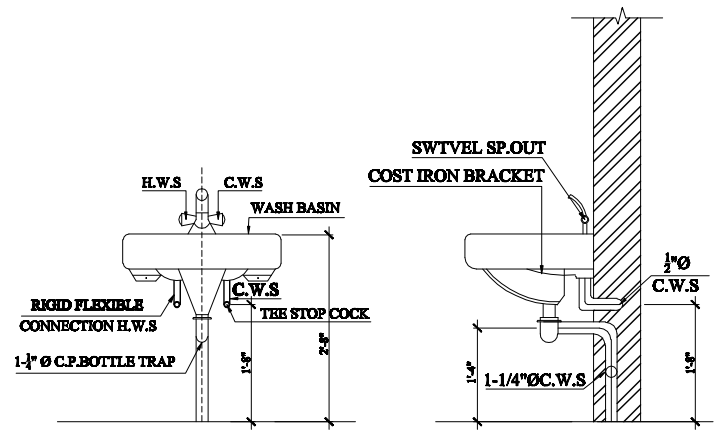

FRONT ELEVATION **SIDE ELEVATION**

WASH BASIN-DETAIL
NOT TO SCALE

GIRLS HOSTEL UNIVERSITY OF KARACHI (ICCBS)	PLUMBING DETAILS	DATE: MAR 2017 DRAW: SHOAIB DRG. NO. P-09	SHAHZAD ASSOCIATES CONSULTING ARCHITECTS, ENGINEERS & PLANNERS KARACHI OFFICE: 2ND FLOOR FARZANA BUILDING,SHAHEED-E-MILLAT ROAD. KARACHI. TEL: 4388857,4384591, FAX:(92-021) 4530754