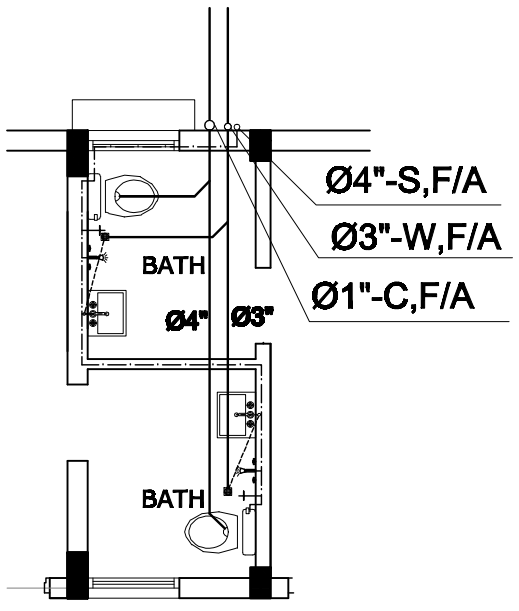

TYPICAL TOILET DETAIL
G.FLOOR /FIRST FLOOR

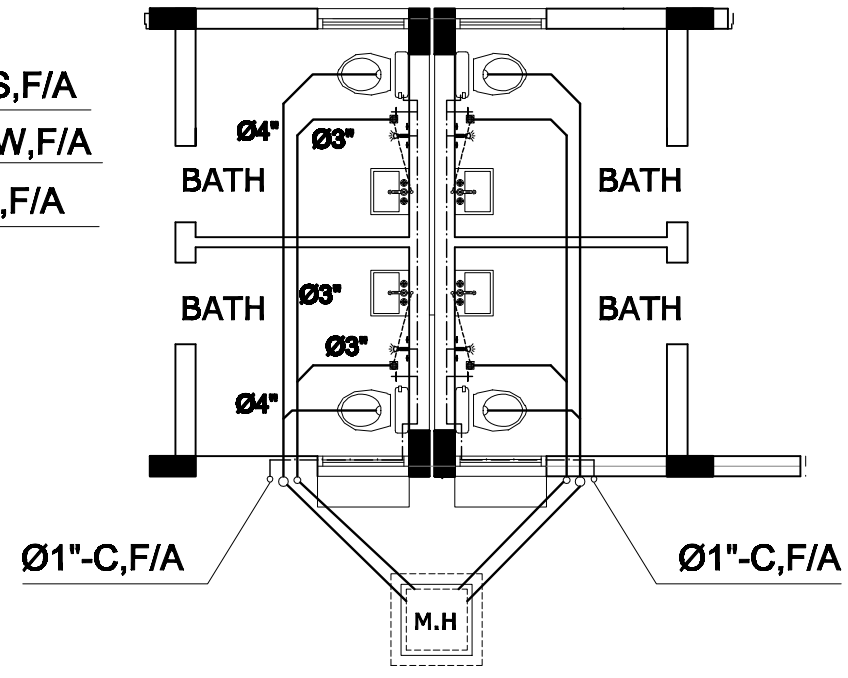

TYPICAL TOILET DETAIL
G.FLOOR

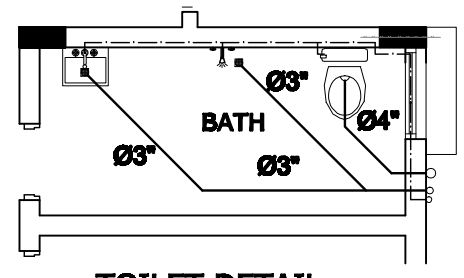

TOILET DETAIL
G.FLOOR

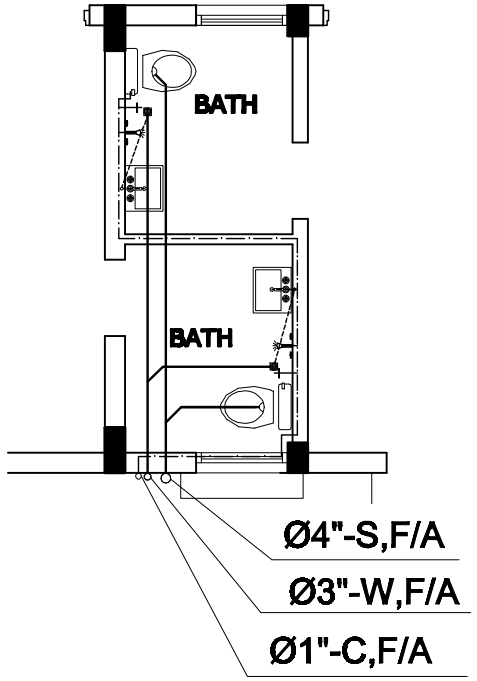

TYPICAL TOILET DETAIL
G.FLOOR /FIRST FLOOR

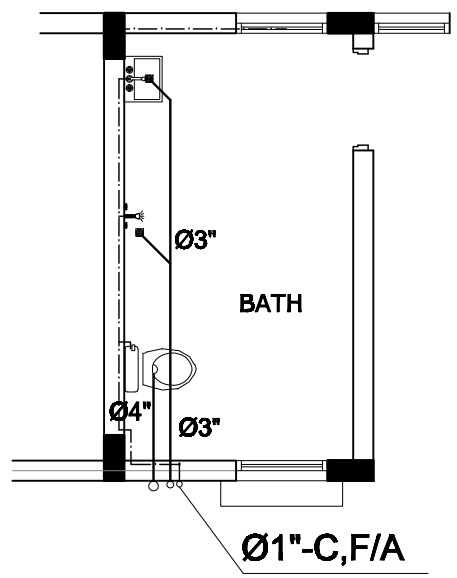

TOILET DETAIL
G.FLOOR

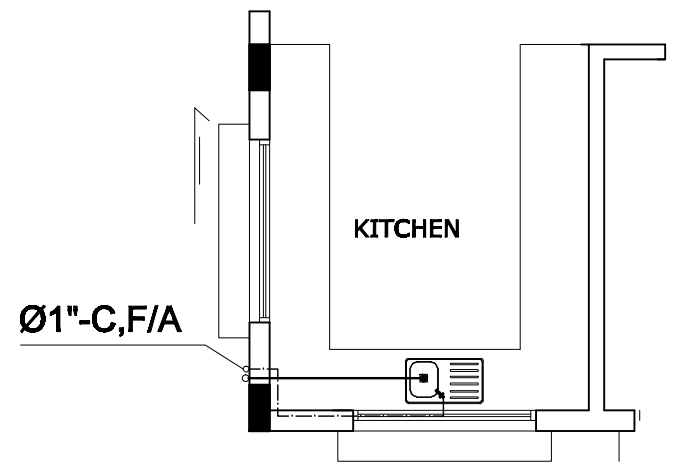

KITCHEN DETAIL
G.FLOOR

Project : GIRLS HOSTEL AT UNIVERSITY OF KARACHI (ICCBS)	Title : GROUND FLOOR PLUMBING LAYOUT AND DETAIL	Date : MARCH 2017	SHAHZAD ASSOCIATES
		Scale : N.T.S	CONSULTING ARCHITECTS, ENGINEERS & PLANNERS
		Drawn by : SK HUSSAIN	KARACHI OFFICE: 2ND FLOOR FARZANA BUILDING,SHAHEED-E-MILLAT ROAD. KARACHI. TEL: 4388857,4384591, FAX:(92-021) 4530754
		Dwg No. : P - 07	